[illegible]

HK-510

[illegible]

[illegible]

[illegible]

[illegible]

■ [illegible]

[illegible]
IPX4[illegible]

■ [illegible]

HK-510[illegible]UV[illegible]
[illegible]

CCTV[illegible]

■ [illegible]

[illegible]	
■ [illegible] ■ [illegible] ■ [illegible]	
⚠	[illegible]
⃠	[illegible]
❗	[illegible]

⚠ [illegible]	
⃠ [illegible]	■ [illegible]
	■ [illegible]
	■ [illegible]
	■ [illegible]
	■ [illegible]
	■ [illegible]
❗ [illegible]	■ [illegible]
	■ [illegible]
	■ [illegible]
	■ [illegible]

※ [illegible]

- [illegible]
  [illegible] + [illegible] + [illegible]
- [illegible]

■ [illegible]

1, [illegible] 2 [illegible]
[illegible]

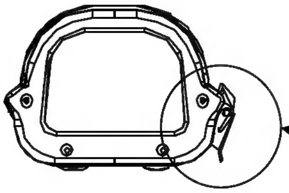

[illegible] 2 [illegible]

2, 4 [illegible]

3, [illegible] 1/4 [illegible]
[illegible]

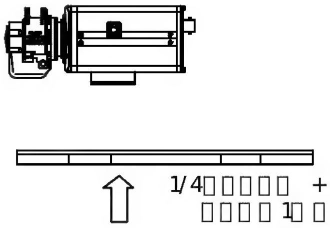

1/4 [illegible] + [illegible] + [illegible]
[illegible] 1 [illegible]

※ 1 [illegible]

4, [illegible]
[illegible]
※ [illegible]
[illegible]
[illegible]

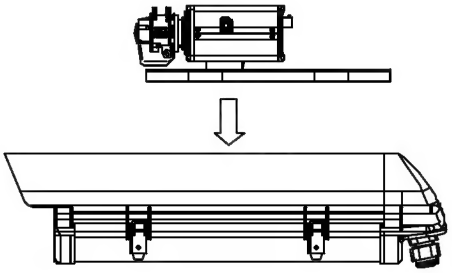

5, [illegible]
[illegible]

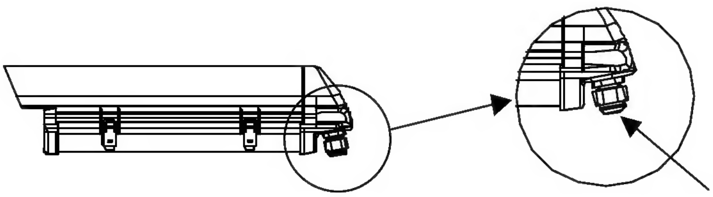

[illegible] 2 [illegible]

6, [illegible]
[illegible]
[illegible]

■ [illegible]

[illegible]	HK-510
[illegible]	[illegible] UV [illegible]
[illegible]	t [illegible] 3mm W93 × H68mm
[illegible]	[illegible]
[illegible]	IPX4 [illegible]
[illegible]	W144 × H100 × D397.5mm [illegible]
[illegible]	W100 × H80 × D280mm
[illegible]	[illegible] 1.5kg
[illegible]	[illegible]
[illegible]	[illegible] 1/4 [illegible] × 10mm 2 [illegible] 1 [illegible] [illegible] M3 × 6mm 2 [illegible]

■ [illegible]

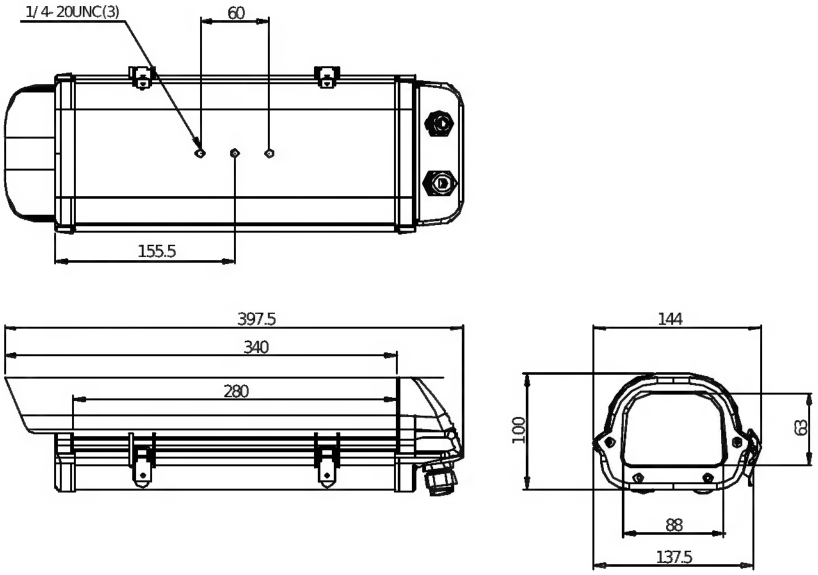

■ [illegible]

1, [illegible] [illegible]

2, [illegible]

1, [illegible]
[illegible]

2, [illegible]

3, [illegible]
[illegible]
[illegible] / [illegible]
[illegible]

[illegible]	[illegible] HK-510
[illegible]	[illegible] [illegible] [illegible]
[illegible]	TEL [illegible] [illegible] −

[illegible] [illegible]

[illegible] **607-8411**

[illegible] [illegible] **37-7**

TEL [illegible] 075-593-2103 **FAX [illegible] 075-593-2868**